INSTRUCTION MANUAL
PERISTALTIC PUMP

TEC

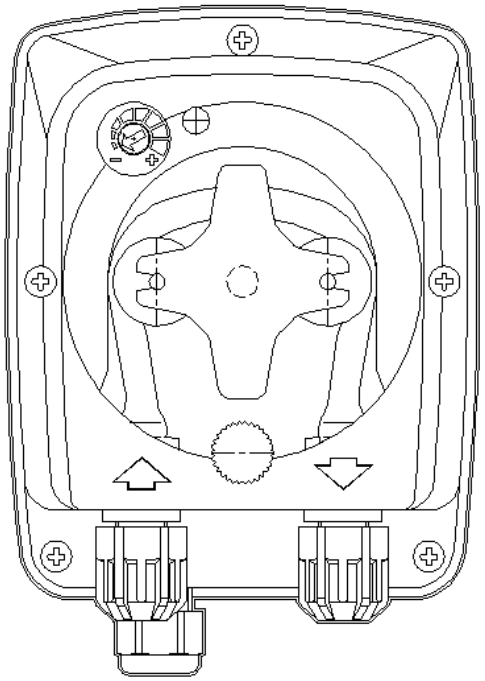

AQUA INDUSTRIAL GROUP

FILTRATION - DOSING - DETERGENT & HYGIENE - POOL EQUIPMENT

CE

DECLARATION OF CONFORMITY

Company:	**AQUA S.p.A.**
Address:	**Via T. Crotti, 1 - 42018 - San Martino in Rio (RE)**

Hereby declares that the products named:

• TEC

Responds to the principal features of the following European Directives:

- **2014/30/CE of 26/02/2014** - *Harmonization of the laws of the Member States relating to electromagnetic compatibility – EMC Directive*
- **2014/35/CE of 26/02/2014** - *Harmonization of the laws of the Member States relating to the making available on the market of electrical equipment designed for use within certain voltage limits – Low Voltage Directive*
- **2011/65/UE of 08/06/2011 with subsequent update 2015/863 of 31/03/2015** – *ROHS III Directives*
- **2012/19/UE of 04/07/2012** - *WEEE Directives for electrical and electronic waste*

This declaration is issued under the responsibility of Aqua S.p.A.

San Martino in Rio (RE) - 08 settembre 2020

Davide Vezzani
Certification Manager - Aqua S.p.A.

AQUA S.p.A.
Società soggetta a direzione e coordinamento di Finanza Cooperativa S.p.a. - Cap. Soc. € 10.057.488,00 - Sottoscritto e Versato
S. Martino in Rio - 42018 - Reggio Emilia - ITALY - Sede legale: Via Crotti, 1 - Sede operativa: Via Bernolo, 3 - Cod. Fisc. e PIVA 02020440350 - Reg. Imprese di RE 02020440350
Tel. +39.0522.296506 - Fax +39.0522.646160 - www.aqua.it - e-mail: aqua@aqua.it

Speed adjustable peristaltic pump

TECHNICAL FEATURES

Power supply: read the label on the pump
Absorbed power (max): 4 W.
Suction height (max): 1.5 m.
Capacity and backpressure: read the label on the pump

Before starting the assembly, read carefully these instructions and follow them when installing. Should the instructions indicated in this manual be not observed or not followed correctly, damages to people, device and/or the system may occur.

STANDARDS OF REFERENCE

Our pumps are manufactured according to General Standards in force and in compliance with the following European Directives:

n° 2014/30/CE " E.M.C.
n° 2014/35/CE "DBT Low Voltage Directive"
n° 2011/65/UE , 2012/19/UE "direttive RoHs e WEEE"

BEFORE STARTING

It is recommended to read carefully the label located on the pump and verify the following sections:

- The peristaltic tube must be compatible with the liquid to be dosed.
- Power voltage must be compatible with that indicated.
- Pressure in correspondence to the injection section must be lower or equal to the nominal one of the pump.

WALL MOUNTING

Use the provided adhesive label to fix the pump to the wall.

- Apply the label on the wall, where the pump must be placed, and drill holes in the two sections of the adhesive card.
- Fix the bracket to the wall using the provided plugs and screws.
- Place the pump on the bracket.
- Ensure the fixing is stable.

It is also recommended to install the pump in a dry environment, away from heat sources and exhaust vapour.

ELECTRIC INSTALLATION

Before performing any intervention on the pump, disconnect the power supply voltage of the machine.

Connect the cable of the pump at a voltage compatible with the label one, so that there can be an all-pole disconnection device with a contact opening distance of at least 3 mm.
CAUTION !!!!!

Verify that the earth system is perfectly functional and complies with the applicable regulations. Make sure that the highly sensitive differential switch is present (0.03 A). Verify that the rated values of the pump are compatible with those of the mains. Never install the pump directly in parallel with inductive loads (e.g. motors/solenoid valves) if necessary, use an isolating relay.
There are 2 protection devices inside the pump: a varistor and a fuse.

HYDRAULIC INSTALLATION

- the suction tube must be located inside the product container and then connected to the pump suction fitting (with ▲ mark on the cover) and tightened with the appropriate ring-nut.
- the delivery tube must be inserted on the pump delivery fitting (with ▼ mark on the cover) and tightened with the appropriate ring-nut; then connect it to the tank inlet fitting or to the injection valve.

TANK INLET ASSEMBLY (see fig. 1)

Drill a hole of 10 mm and insert the inlet fitting in the tank.

Speed adjustable peristaltic pump

INJECTION VALVE ASSEMBLY (see fig. 1)

Connect the injection valve between the solenoid valve and the boiler of the washing machine. The provided tube holder fitting can also be used to connect the valve directly to the hydraulic doser tube.

OPERATION OF THE PUMP (see. fig. 2)

The potentiometer allows to adjust the pump speed:

- to the minimum (totally counter clockwise rotated): 10%
- to the maximum (totally clockwise rotated): 100%

Moreover, speed is displayed by modulating the green LED period on the basis of 10 seconds.

OPERATION OF THE TWO-COLOURED LED

The two-coloured Led indicates the various pump operation phases:

- if it is fixed orange, the pump is performing the priming phase.
- if it is flashing green, the pump operates regularly; moreover, the flashing frequency is directly proportional to the speed rotation, in fact:

10% => 5 seconds on and 5 seconds off – in 10 seconds it performs 1 flash (slow)
50% => 1 second on and 1 second off – in 10 seconds it performs 5 flashes
100% => 0.5 seconds on and 0.5 seconds off – in 10 seconds it performs 10 flashes (fast)

- flashing red means the motor is blocked or, in the level probe version, it indicates the exhaustion of the chemical product to be dosed.
- fixed red means the pump is in stand-by, switch positioned on off or the pump is performing the three re-starting attempts of the motor.

OPERATION OF THE SWITCH

Placed on the lower part of the pump, the switch has 3 positions:

I: the pump is active (ON)
The led is flashing green with a frequency proportional to the speed set on the potentiometer.

O: the pump is in stand-by (OFF)
Led is fixed red.

II: the pump is in priming mode (MOM)
Led is fixed orange, the pump works for 60 seconds at the maximum speed. If the button is pressed again before the 60 seconds, the pump goes in stand-by or in normal operation, depending on the position of the switch.

LEVEL ALARM (only for the model with level probe)

A level probe can be connected to the pump to signal the end of the product, which is indicated by the pump in the following way:

- Acoustic signal through the buzzer (if installed on the pump), with a frequency of 1 second on and 1 second off;
- Red led flashing with the same frequency of the buzzer.

The inlet has a recognition filter both upwards and downwards of 3 seconds for discriminating false contacts and not desired level alarm signals.
During the level alarm, the pump continues rotating with the set speed.
To exit from this condition, the chemical product to be dosed must be restored.

In priming mode, the level alarm is not indicated.

MOTOR ALARM

In case an excessive absorption of the motor occur due to malfunctions, the pump carries out three attempts of activation of the motor, after which the alarm is triggered and signalled by the pump in the following way:

- Acoustic signal through the buzzer (if installed on the pump), with a frequency of 1 second on and 1 second off;
- Red led flashing with the same frequency of the buzzer.

During the motor alarm, the pump clearly stops.
To exit from this condition, switch off and on the pump by using its switch or by acting on the power supply.

Speed adjustable peristaltic pump

SWITCH ALARM

If the switch is left on the OFF position, after 10 minutes the switch alarm is activated and signalled by the pump in the following way:

- Acoustic signal through the buzzer (if installed on the pump), with a frequency of 2 seconds on and 2 seconds off;
- Red led flashing with the same frequency of the buzzer.

During the motor alarm, the pump clearly stops.
To exit from this condition, switch off and on the pump by using its switch or by acting on the power supply.

MAINTENANCE (see fig. 3)

- Periodically verify the level of the tank containing the chemical product to be dosed, in order to avoid the pump running in vain.
- Verify the foot strainer and clean it periodically from any residuals of crystallised product or accumulated dirt.
- Ensure there are no impurities in the suction and delivery tubes, because they may damage the peristaltic tube and, at the same time, cause anomalies in the capacity.
- Periodically verify the operation of the pump and the status of the peristaltic tube, especially for very aggressive chemical products.

PROVIDED KIT OF ACCESSORIES

Pumps for detergent

- PVC suction and delivery tubes (4 m.)
- Foot strainer
- Tank inlet fitting

Pumps for sparkling aid

- PVC suction tube (2 m.)
- PE delivery tube (4 m.)
- Foot strainer
- Steel check valve with viton® o-ring
- Tube holder for the check valve

Note on environmental protection

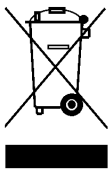

After the implementation of the European Directive 2002/96/EU in the national legal system, the following applies:
Electrical and electronic devices may not be disposed of with domestic waste. Consumers are obliged by law to return electrical and electronic devices at the end of their service lives to the public collecting points set up for this purpose. Details to this are defined by the national law of the respective country. This symbol on the product, the instruction manual or the package indicates that the product is subject to these regulations. By recycling, reusing the material or other forms of utilizing old devices, you are making an important contribution to protecting our environment.

Figura 1

Filtro di fondo **Raccordo ingresso in vasca** **Valvola di non ritorno**
Foot strainer **Tank inlet fitting** **Check valve**
Filtre de fond **Raccord d'entrée dans le bac** **Clapet de non retour**
Filtro de fondo **Racor de entrada al depósito** **Válvula de no retorno**
Bodenfilter **Verbindungsstück Eingang in Wanne** **Rückschlagventil**
Нижний фильтр **Входной фитинг** **Обратный клапан**

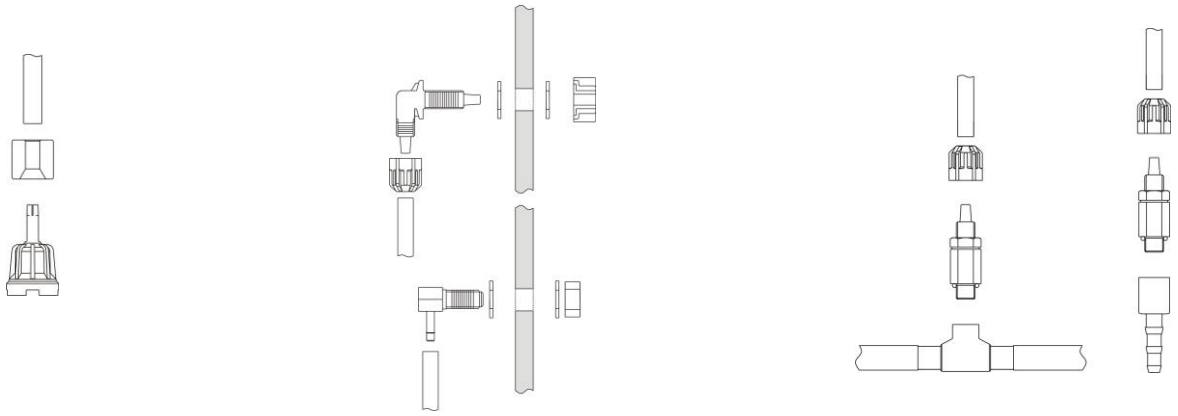

Figura 2

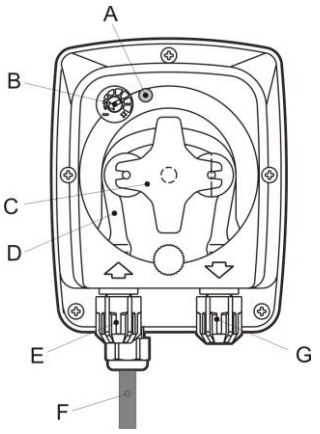

Rif.	Descrizione	Ref.	Description
A	Led bicolore	A	Two-coloured led
B	Potenziometro	B	Potentiometer
C	Porta rullini	C	Roll holders
D	Tubo peristaltico	D	Peristaltic tube
E	Raccordo di aspirazione	E	Suction fitting
F	Cavo di alimentazione 2x0,75mm^2 (2 m.)	F	Power cable 2x0.75mm^2 (2 m.)
G	Raccordo di mandata	G	Delivery fitting

Réf.	Description	Ref.	Descripción	Bezug	Beschreibung
A	Led bicolore	A	Led bicolor	A	Zweifarbige LED-Leuchte
B	Potentiomètre	B	Potenciómetro	B	Potenziometer
C	Porte rouleaux	C	Porta rodillos	C	Rollenhalterung
D	Tuyau péristaltique	D	Tubo peristáltico	D	Peristaltikschlauch
E	Raccord d'aspiration	E	Racor de aspiración	E	Ansaugverbindungsstück
F	Câble d'alimentation 2 x 0,75 mm^2 (2 m.)	F	Cable de alimentación 2x0,75 mm^2 (2 m)	F	Versorgungsverbindung 2x0,75 mm^2 (2 m)
G	Raccord de refoulement	G	Racor de impulsión	G	Ablassverbindungsstück

	Описание
A	Двухцветный светодиод
B	Потенциометр
C	Хомут
D	Перистальтическая трубка
E	Всасывающий фитинг
F	Кабель питания 2x0,75мм^2 (2 м)
G	Напорный фитинг

Figura 3

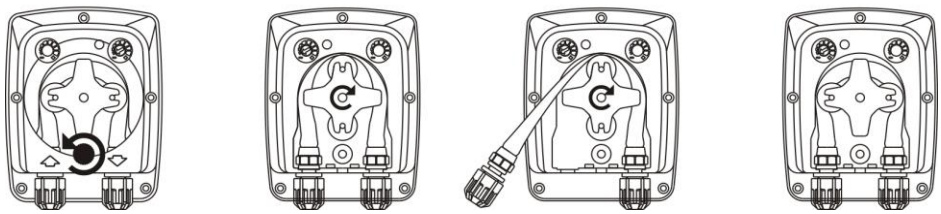

Rimozione del tubo peristaltico
Removal of the peristaltic tube
Enlèvement du tuyau péristaltique
Retiro del tubo peristáltico
Entfernen des Peristaltikschlauchs
Снятие перистальтической трубки

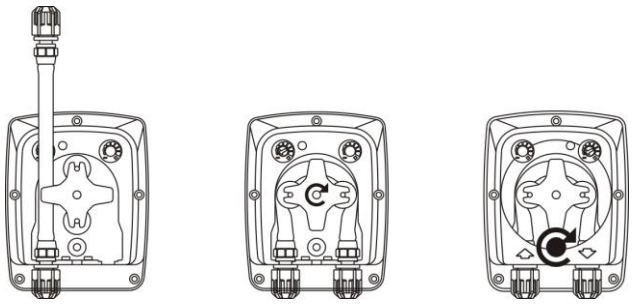

Riposizionamento del tubo peristaltico
Repositioning the peristaltic tube
Repositionnement du tuyau péristaltique
Reposicionamiento del tubo peristáltico
Erneute Positionierung des Peristaltikschlauchs
Установка перистальтической трубки

Figura 4

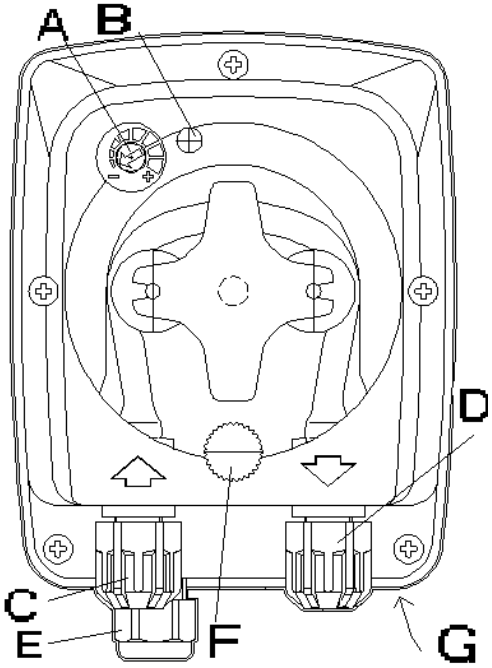

Assembling

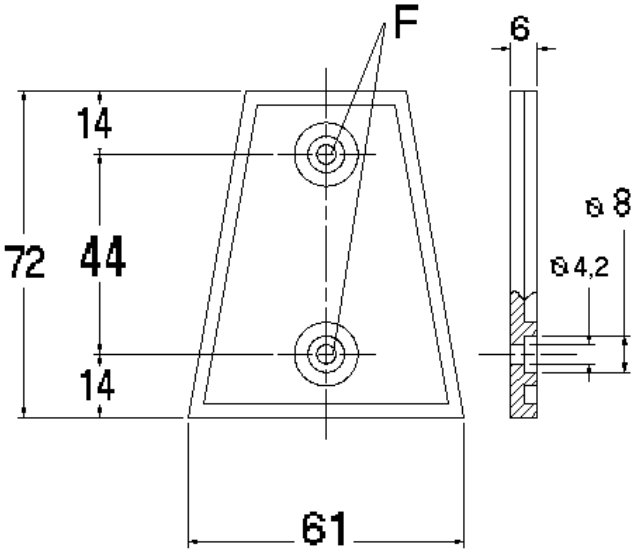

Disassembling

Figura 5

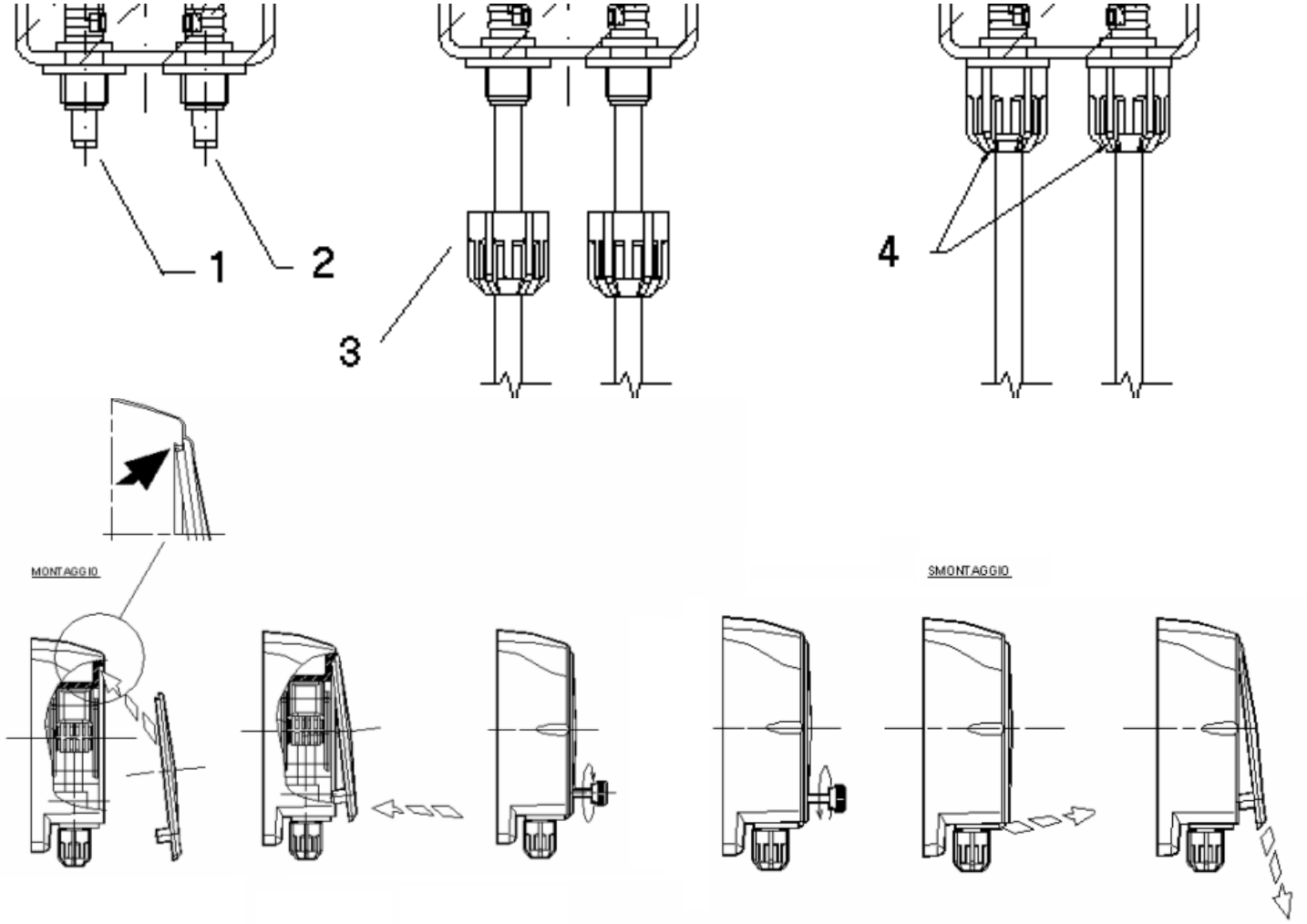

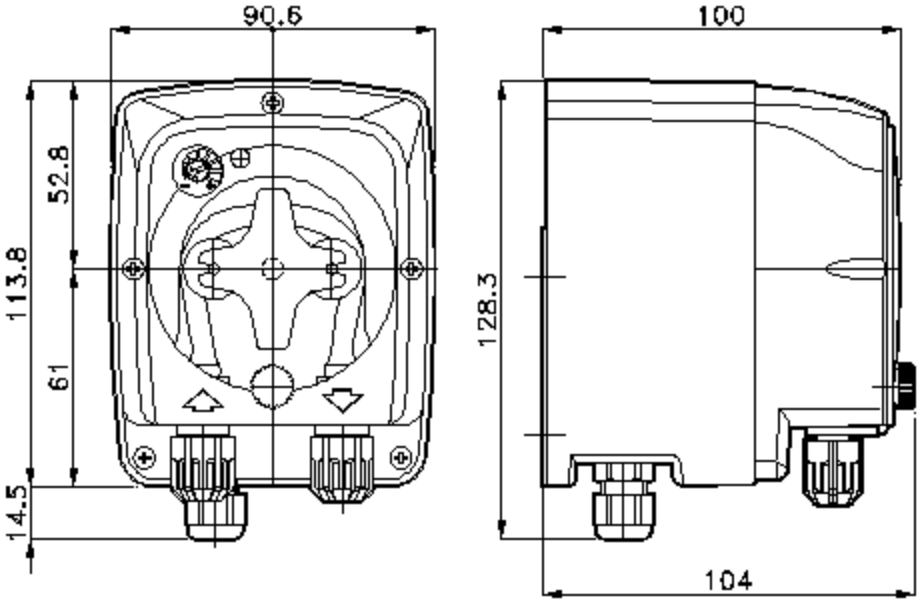

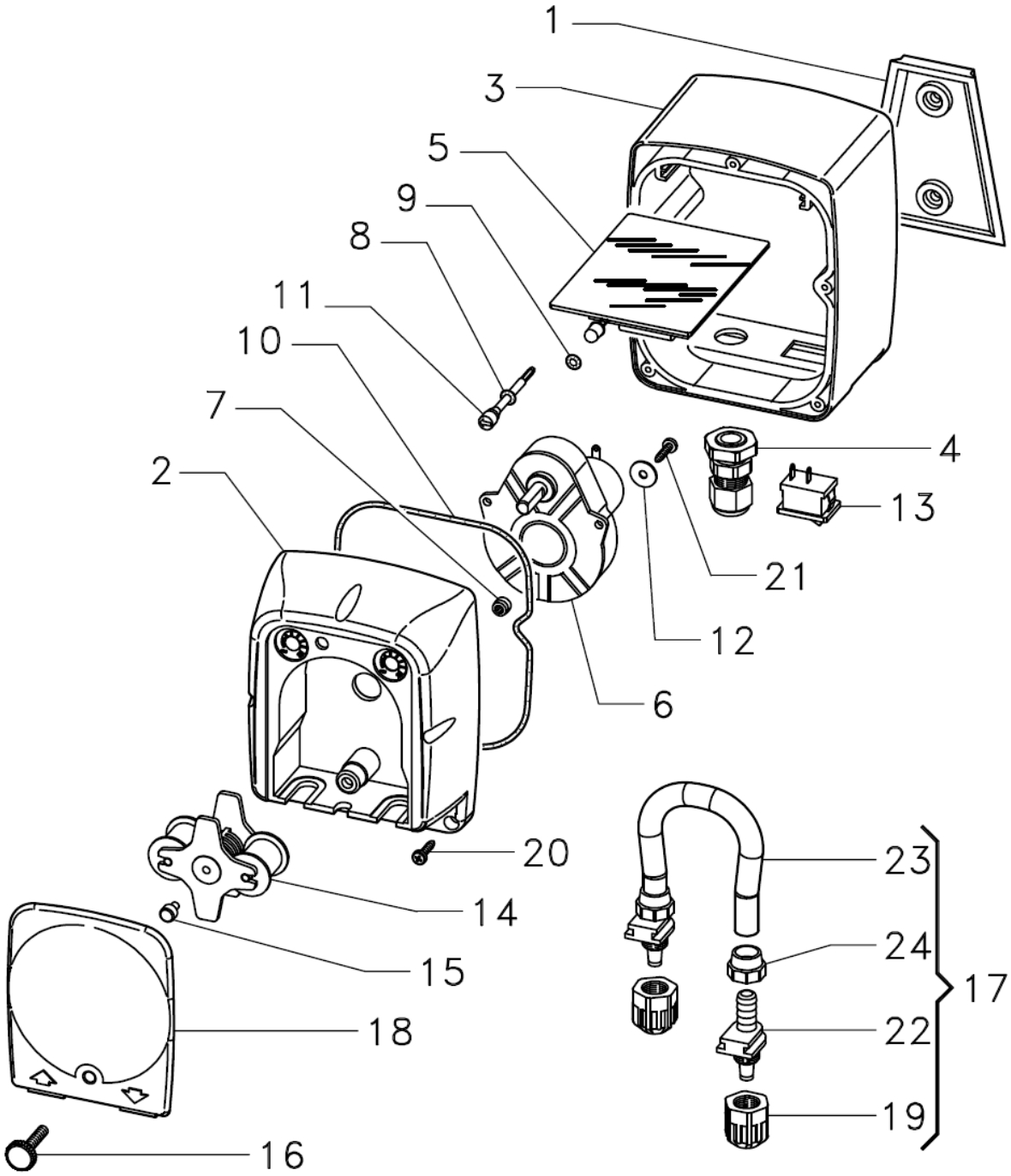

PDP TEC-RS 230V	PDP TEC 230V
Assorbimento (Watt)	Assorbimento (Watt)
8	4

PERISTALTICA TEC

Pos.	Codice	Descrizione	Quantità
1	ADSP8000025	STAFFA DI FISSAGGIO PER-R NERO PP	1
2	ADSP8000084G	CASSA ANTERIORE TEC PP GRIGIA RAL 90687	1
3	ADSP8000094G	CASSA POSTERIORE TEC GRIGIA RAL 90687 (VN)	1
4	ADSP6000424	PRESSACAVO PASSO PG7 - 1900.07 - NERO	1
5	ADSP8000083T	SKD TEC 85-265V - SKD EL230 -	1
	ADSP8000084T	SKD TEC 24VAC - SKD EL231 -	
	ADSP8000083L	SKD TEC 85-265V + LIVELLO - SKD EL230 -	
	ADSP8000084L	SKD TEC 24VAC + LIVELLO - SKD EL231 -	
6	ADSP8000254	MOTORE RAP 225 24VDC PER-R	1
	ADSP8000255	MOTORE RAP 125 24VDC PER-R	
7	ADSP6000502	DADO M 4 UNI 5587 - INOX A2	1
8	ADSP5007072	OR "R1" NBR - 2.60X1.90	1
9	ADSP5007013	OR - RIF. 2015 - DUTRAL	1
10	ADSP5007074	OR - RIF. 2412 - NBR	1
11	ADSP8000095	PERNO REGOLAZIONE PERISTALTICA TEC ROSSO	1
12	ADSP6000469	RONDELLA PIANA FASCIA LARGA D. 3 x 9 - DIN 9021 INOX A2	2
13	ADSP6000685	INTERRUTTORE ON/OFF/PAUSA 3A 250V TIPO A BILICO	1
14	ADSP8000009A	PORTA RULLINI COMPLETO PER-R 4/6-1	1
	ADSP8000023A	PORTA RULLINI COMPLETO PER-R 1-3 TYGON	
	ADSP8000023B	PORTA RULLINI COMPLETO PER-R 1-3 SILICONE 3X7	
15	ADSP8000028	PERNO GUIDA PORTARULLINO PER-R	1
16	ADSP8000029	MANOPOLA FISSAGGIO COPERCHIO TRASPARENTE TEC	1
17	ADSP800I109	TUBO SANTOPRENE PER-R INCOMPLETO	1
	ADSP800I128	TUBO SILICONE 3X7 PER-R INCOMPLETO	
	ADSP800I112	TUBO TYGON PER-R INCOMPLETO	
	ADSP800I138	TUBO PHARMED PER-R INCOMPLETO	
18	ADSP8000081	COPERCHIO FRONTALE TRASPARENTE TEC FUME'	1
19	ADSP5004001E	GHIERA FISSATUBO PP NERA 1/8" 4X6 STD	2
20	ADSP6000714	VITE M 2,9 X 13 UNI 6954 (TCTC) INOX A2	5
21	ADSP6000749	VITE M 2,9 X 9,5 UNI 6954 (AF-TCTC) INOX A2	2

20-05-2011

TEC-R DET